Spare Parts

High pressure spray gun ST-2300

Item-No. 202300562

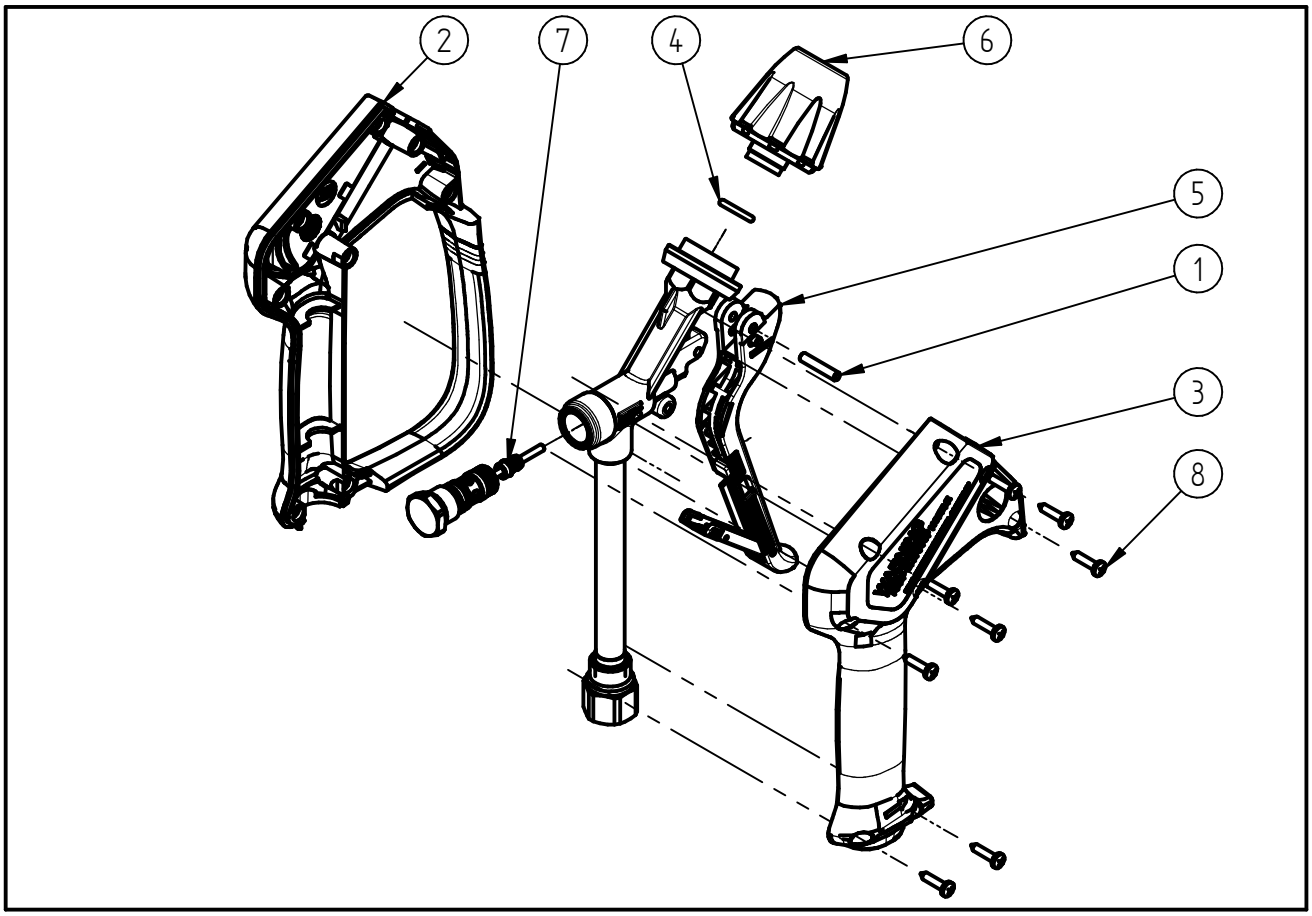

Pos.	Item-No.	Description
1	040007081	Axle for trigger 4x22 honed
2	020008615	Plastic housing w. h. ST-2600 bl
3	020008620	Plastic housing ST-2600 black
4	050000248	O-ring 11,91x2,62
5	202300411	Trigger complete ST-2300 black
6	202300301	QR2014 Coupling black
7	202300490	Repair-kit ST-2300
8	900035161	Repair-kit screws